shernbao®

V2

USER MANUAL

DUAL MOTOR FORCE DRYER

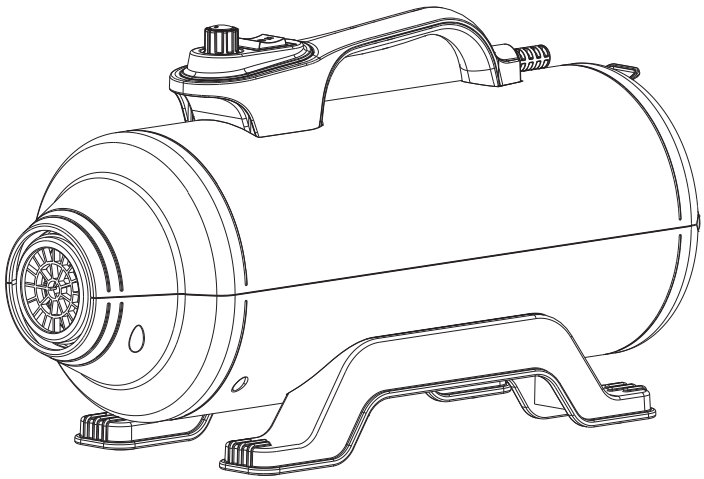

DHD-2400T

www.groomart.hu | hello@groomart.hu | www.groomart.eu
Wuhan Shernbao Pet Products Manufacturing Co., Ltd.

shernbao®

V2

WWW.SHERNBAO.COM

© 2016 B10

Direction for Use

1. Plug the flexible hose to the front cap connector.
2. Plug in socket with right voltage, switch power on. Please be sure to grip the hose connector before turn on the switch, or else it will be damaged due to fiercely swing.
3. Adjust wind speed, choose suitable nozzle according to your need.
4. Turn off the power switch after usage.
5. Unplug the dryer from the mains, unplug the hose and nozzle, and put the machine and accessories back to box.

Correct Disposal of this product

This marking indicates that this product should not be disposed with other household wastes throughout the EU. To prevent possible harm to the environment or human health from uncontrolled waste disposal, recycle it responsibly to promote the sustainable reuse of material resources. To return your used device, please use the return and collection systems or contact the retailer where the product was purchased. They can take this product for environmental safe recycling.

Safety Instruction!

·Force dryer needs a single outlet which is at least 15A and has ground wire or itself. Please connect force dryer with a correct outlet and do not share with other appliances.
·Before switch on or turn off the power every time, Please adjust the wind to the lowest speed, this can extend the lifetime of the machine.
·Do not insert pins or any metal things into the clearance of the machine, otherwise that would be easy to get an electric shock and short circuit.
·Do not use a cloth or bag to stop the diffuser or foam filter, otherwise it would damage the machine.
·If the machine has been used for some time and malfunction occurs, you must ask the professional person to repair it. Do not disassemble by yourself.
·If the power cord is damaged, discontinue and inform professors.
·Please keep children away when you operate the machine.
·Do not hit the housing with fierce shock or drop the machine from high, which will damage the frame and motor.
·Cardiopath or people with pacemaker are forbidden to use this machine.
·Please hold the nozzle and hose firmly before turning the machine on, or the hose may wiggle and cause injury.
·Must plug hose into the front cap connector before turning the machine on.
·It's strictly forbidden to touch the components in the front of cap connector with hand or any other objects in any situation.
·Appliance is not intended for use by persons (including children) with reduced physical, sensory or mental capabilities, or lack of experiences and knowledge, unless they have been given supervision or instruction concerning use of the appliance by a person responsible for their safety.
·Children should be supervised to ensure that they do not play with appliance.
·If the supply cord is damaged, it must be replaced by the manufacturer or its service agent or a similarly qualified person in order to avoid a hazard.

www.groomart.hu I hello@groomart.hu I www.groomart.eu

Structure Chart & Accessories

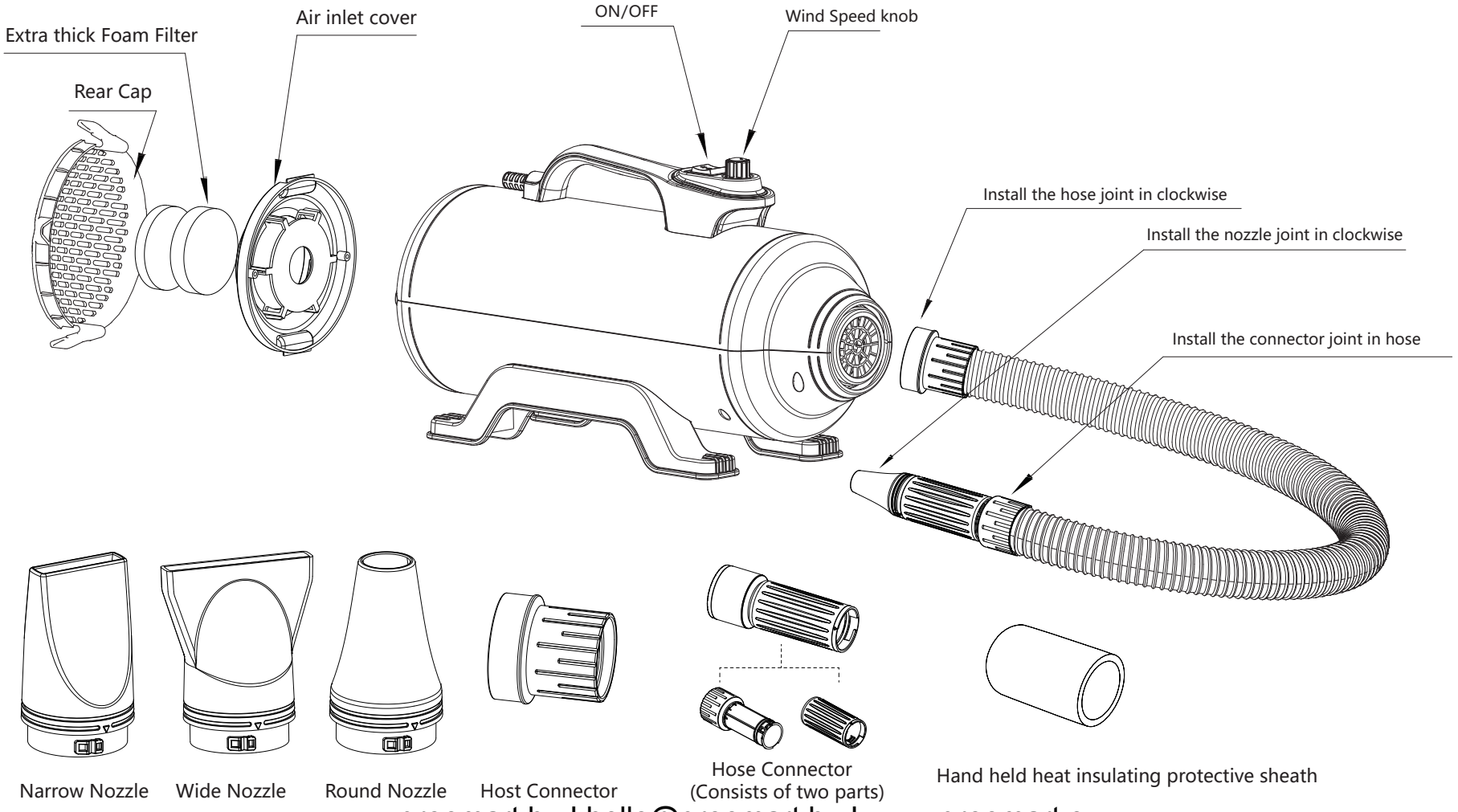

Force Dryer Buying Guide

ITEM NO.	MAX POWER	HEAT POWER	BLOW FORCE	MAX SPEED	Max Airflow	Temperature Rise	NOISE	NW.
DHD-2400T	2400W	---	≈960g	≈590MPM ≈73,200FPM	≈7.6 CBM ≈270 CFM	≤62℃ ≤143℉	≤78dB	6.5kg 14.3lb

Dryer Accessories List



FDW-01
Wall Bracket for DHD-2400T





FDS-02
Groomer's Third Arm

ONE YEAR WARRANTY Guarantees - The Shernbao Force Dryers are guaranteed against defects in materials and workmanship for one years from the original date of purchase. Should any components become inoperative due to defects in materials or workmanship during the one year warranty period, Shernbao Industries will repair the dryer free of charge subject to the limitations below. For warranty service of your Shernbao Force Dryer, please ship PREPAID to Shernbao Industries or call for the location of your nearest authorized service center.

Warranty Limitations: Warranty does not cover shipping or transportation costs. Warranty applies to original purchaser only. Proof of date of purchase is required. Warranty is void if registration card is not mailed within 30 days of purchase or delivery. Warranty does not include replacement of carbon brush and rotor, parts. Warranty does not cover abuse, accidents, acts of war, droppage, improper voltage, disassembly, repaired or serviced by anyone except Shernbao Industries or Shernbao authorized service, the warranty will void.

Ease of Use



Install the nozzle joint in clockwise





Install the hose joint in clockwise



Fit heat insulation sleeve

Maintenance





·Please clean the sponge filter by washing or air blowing, be sure to fix the filter again when it's dry.
·Keep the surface clean and dry, and use a dry and soft cloth to clean the painted surface.
·Wet cloth with neutral detergent and wipe to remove stubborn stains and dirt.
·Use only mild neutral detergent.
·When the carbon brushes run out, please renew the brushes following the guide line in this booklet or consult with the experts.

INTRODUCTION

SHERNBAO is well known to produce Force Dryer more than 12 years, it engaged in this line since 2004. Now we launched a new dual motor dryer on the market, **Hurricane**. Ideal for heavy coated or long haired animals, it has extra power for faster grooming. Cuts drying time significantly meanwhile use a noise-cut technology for quiet operation.The best for pet grooming shop to leave competitors far behind.

·Unbeatable high velocity and blow force.
·Variable-speed controller can adjust wind speed and air volume according to your need.
·New streamlined appearance design possesses modernized style and beautiful shape contour.
·Motor Life Span has been extended.
·3pcs Heavy duty blower nozzles for different pets drying applications.
·High impact and rugged ABS housing material.
·Easy-to-change and washable filter.

DHD-2400T

A better air flow system and a smaller flow friction force, has allow the New **Hurricane** to perform at a higher energy ratio. It will allow for a 30% saving in energy consumption.
Use a stream of air warmed by flowing over the motor to effectively blow water from the pet's coat to cut drying time by as much as 75%.

Safety Performance

SHERNBAO Dual Motor Dryers offers high temperature resistant silicone wires, high temperature resistant switch and circuit boards, emergency cut off switch for an overheated motor, durable grounded wires allow for the safety usage performance on the market.

www.groomart.hu I hello@groomart.hu I www.groomart.eu